SIMON HIGH POWER LED

LARGE SIZE

Square lantern made in shockproof resin material, UV rays stabilized, rust and corrosion-free. Modular construction suitable for post top, wall and hanging installation. Provided with reflective ceiling designed to host the lighting source and equipped with TÜV-CB certified, long-life and efficient **E27 high power LED lamp included.** Insulation class II, Protection rating IP55.

Lanterna quadra realizzata in resina antiurto, stabilizzato ai raggi UV, inattaccabile da ruggine e corrosione. Idonea per il montaggio a palo, a sospensione o a parete. Provvista di soffitto riflettente progettato per accogliere la sorgente luminosa e fornita ***completa di lampada a LED E27 ad ALTA POTENZA****, certificata TÜV-CB di lunga durata ed elevata efficienza. Classe di isolamento II, grado di protezione IP55.*

U33.132.Q1K

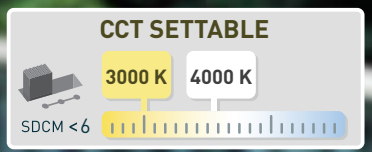

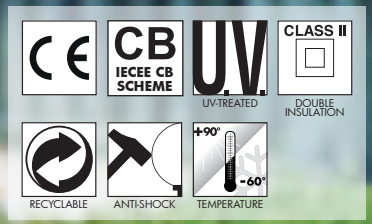

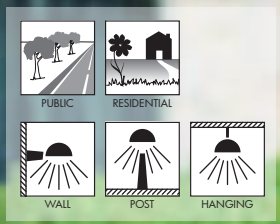

SIMON HIGH POWER LED - LANTERN COMPONENTS

IP55

Decorative **PINNACLE** to be mounted on the roof top for post installation or on the lantern base for hanging installation.

PINNACOLO *decorativo applicabile alla sommità del tetto (montaggio a palo) o sulla base della gabbia (montaggio a sospensione).*

Lantern **ROOF** made of shockproof resin material. Tool-free opening for relamping and maintenance.

TETTO *realizzato in resina antiurto. Removibile senza l'ausilio di attrezzi per manutenzione e cambio lampadina.*

High temperature resistant reflective **CEILING** made of shockproof resin material. Provided with E27 lampholder and equipped with **HIGH POWER LED lamp**. Designed to host and protect the lighting source, granting its safe and quick installation.

SOFFITTO *riflettente realizzato in resina antiurto ad alta resistenza al calore. Fornito completo di portalampada E27 e provvisto di lampada a* ***LED ad ALTA POTENZA.*** *Progettato per accogliere e proteggere la sorgente luminosa garantendone una veloce e sicura installazione.*

DIFFUSER of UV-rays stabilized PMMA, with recess for a power supply cable. One piece only closed at the base to ensure high protection against external agents.

DIFFUSORE *in PMMA resistente ai raggi UV, provvisto di sede per l'alloggiamento del cavo di alimentazione. Realizzato in unico pezzo chiuso alla base per garantire un alto livello di protezione contro gli agenti esterni.*

CAGE made of shockproof resin material, UV-rays stabilized, rust and corrosion-free.

GABBIA *realizzata in resina antiurto, stabilizzata ai raggi UV, inattaccabile da ruggine e corrosione.*

SIMON HIGH POWER LED

U33.000 *

Dimensions and weight
Height: 560 mm
Width: 330 mm
Depth: 330 mm
Weight: 4,6 Kg
Junction to support: diameter 60 mm
Area exposed to wind pressure:
CxS = m² 0,102

Moulded colours:
Black *White*

Painted colours:
Antique green *Antique bronze*

Diffuser PMMA:
Clear *Opal*

HIGH POWER LED

- **COST SAVING:** long-life and efficient LED light source.
- **BUILT-IN DRIVER:** quick and easy lamp replacement.
- **GREAT FLEXIBILITY:** E27 standard lamp holder.
- **FUTURE-PROOFED LUMINARIES:** performances easy to upgrade to latest technology developments.
- **SUITABLE FOR OUTDOOR USE:** built-in driver fully protected against heat and humidity by silicone paste.

Lantern equipped with TÜV-CB certified, long-life and efficient **E27 high power LED lamp**, granting the same luminous flux of traditional SON/HQI lighting sources. The lamp can be quickly and easily replaced, making the luminaries maintenance very simple.

100 - 240 V

LAMP	POWER	LUMINOUS FLUX UP TO	COLOUR TEMP.	*ADD. SUFFIX
(*) CCT SET LED E27	15 W	1690 lm	4000 K	.R1K
			3000 K	
	30 W	3620 lm	4000 K	.Q1K
			3000 K	
LED E27	50W	6550 lm	4000 K	.H1L
			3000 K	.H1R

LED LAMPS

TÜV 500 CE CB
LVD EMC ERP

Comply with: EU2019/2015
EU2019/2020

Technical details on page 636.

CCT SETTABLE LED LAMP(*)

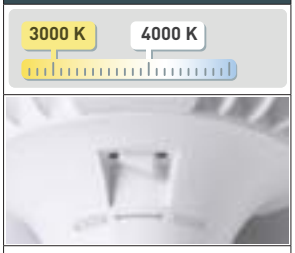

CCT switch settable in two different positions, to select the desired Kelvin temperature (3000K/4000K) and get a customized ambiance.
(15 and 30W only)

** ADD THESE SUFFIXES TO THE REFERENCES MENTIONED IN THE CATALOGUE*

PHOTOMETRIC DATA SAMPLE

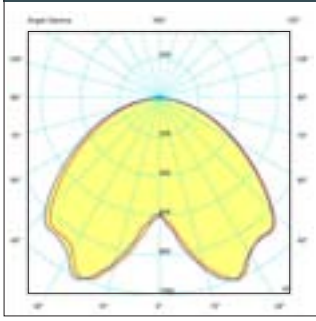

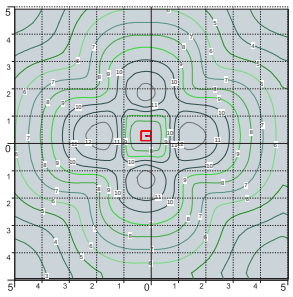

SIMON E27 LED *HIGH POWER 30W*

POST height 3,5mt
10x10mt area: average 15 lux

The photometric data for all the versions are available upon request or on our website.

SIMON E27

LARGE SIZE

E27 square lantern in classic style, made of shockproof resin material, UV-rays stabilized, rust and corrosion-free. Modular construction suitable for post top, hanging and wall installation. Provided with high temperature resistant ceiling suitable for ballast fixation. Insulation class II, protection rating IP 55.

Lanterna quadra E27 in stile classico, realizzata in resina antiurto, stabilizzata ai raggi UV, inattaccabile da ruggine e corrosione. Idonea per il montaggio a palo, a sospensione o a parete. Fornita con soffitto ad alta resistenza al calore idoneo per il fissaggio dei reattori. Classe di isolamento II, grado di protezione IP55.

6,5W	8,5W	11W
800 lm	**920 lm**	**1200 lm**
2700 K	**2700 K**	**4000 K** / **6500 K**

+80°C -30° | 90% HUMIDITY | VOLTAGE SURGE RESISTANT

INDOOR & OUTDOOR USE

U33.000.T1K

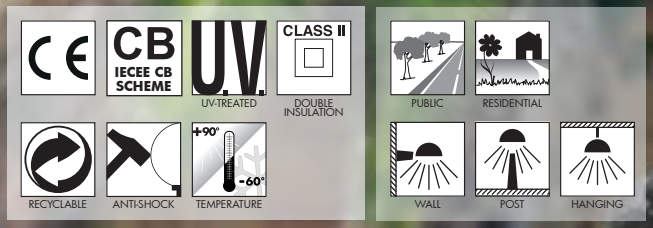

MADE IN ITALY

SIMON E27 - LANTERN COMPONENTS

IP55

Decorative **PINNACLE** to be mounted on the roof top for post installation or on the lantern base for hanging installation.

***PINNACOLO** decorativo applicabile alla sommità del tetto (montaggio a palo) o sulla base della gabbia (montaggio a sospensione).*

Lantern **ROOF** made of shockproof resin material. Tool-free opening for relamping and maintenance.

***TETTO** realizzato in resina antiurto. Removibile senza l'ausilio di attrezzi per manutenzione e cambio lampadina.*

High temperature resistant reflective **CEILING** made of shockproof resin material. Provided with E27 lampholder and suitable for ballast fixation.

***SOFFITTO** riflettente realizzato in resina antiurto ad alta resistenza al calore. Fornito completo di portalampada E27 e idoneo per il fissaggio dei reattori.*

DIFFUSER of UV-rays stabilized PMMA, with recess for a power supply cable. One piece only closed at the base to ensure high protection against external agent.

***DIFFUSORE** in PMMA resistente ai raggi UV, provvisto di sede per l'alloggiamento del cavo di alimentazione. Realizzato in un unico pezzo chiuso alla base per garantire un alto livello di protezione contro gli agenti esterni.*

CAGE made of shockproof resin material, UV-rays stabilized, rust and corrosion-free.

***GABBIA** realizzata in resina antiurto, stabilizzata ai raggi UV, inattaccabile da ruggine e corrosione.*

SIMON E27

U33.000 *

Dimensions and weight
Height: 560 mm
Width: 330 mm
Depth: 330 mm
Weight: 3,8 Kg
Junction to support: diameter 60 mm
Area exposed to wind pressure:
CxS = m² 0,102

Moulded colours:
Black *White*

Painted colours:
Antique green *Antique bronze*

Diffuser PMMA:
Clear *Opal*

LED LAMPS

TÜV SÜD CE CB
LVD EMC ERP

Comply with: EU2019/2015
EU2019/2020

Technical details on page 636.

E27 VERSION

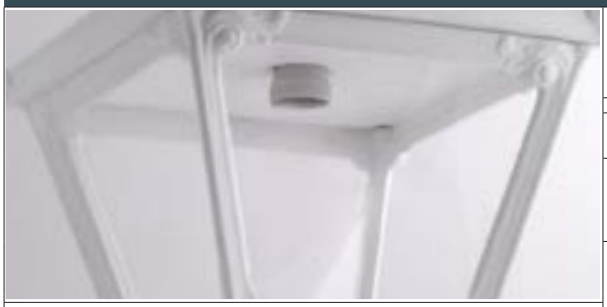

E27 lantern supplied as an option with TÜV-CB certified, long-life, efficient **LED lamps suitable for outdoor use.**

100 - 240 V				*ADD. SUFFIX
Suitable lamps: CFL-LED-SON-HQI MAX 70W		**E27** lampholder only		.E27
LAMP	POWER	LUMINOUS FLUX UP TO	COLOUR TEMP.	
FILAMENT LED E27	**6,5W**	**800 lm**	2700 K	.F1R
(*) CCT SET LED E27	**8,5 W**	**920 lm**	6500 K 4000 K 2700 K	.V1K
(*) CCT SET LED E27	**11 W**	**1200 lm**	6500 K 4000 K 2700 K	.T1K

CCT SETTABLE LED LAMP

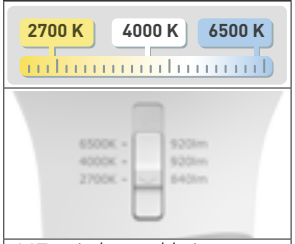

CCT switch settable in three different positions, to select the desired Kelvin temperature (2700K/4000K/6500K) and get a customized ambiance.

PHOTOMETRIC DATA SAMPLE

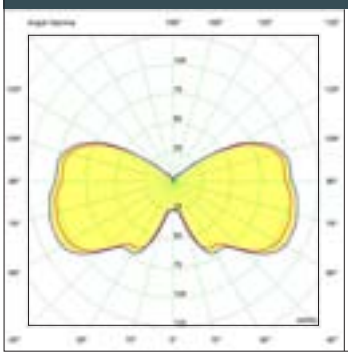

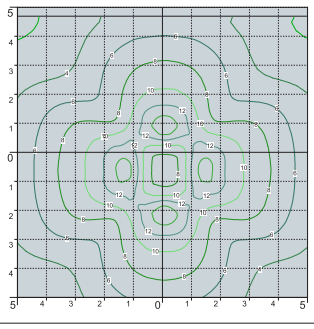

***SIMON E27** clear SON 70W.*

POST height 3.5mt
10 x 10mt area: average 11 lux

The photometric data for all the versions are available upon request or on our website.

** ADD THESE SUFFIXES TO THE REFERENCES MENTIONED IN THE CATALOGUE*

SIMON GX53 LED - FLAT DIFFUSER

LARGE SIZE

Square lantern in classic style, made of shockproof resin material, UV-rays stabilized, rust and corrosion- free. Modular construction suitable for post top, hanging and wall installation. Supplied as standard with **FLAT diffuser** and equipped with TÜV-CB certified, long-life, powerful, efficient and **Kelvin settable GX53 LED modular system**. Designed according to the international regulations against light pollution (standard UNI 10819). Insulation class II, Protection rating IP 55.

*Lanterna quadra in stile classico, realizzata in resina antiurto, stabilizzata ai raggi UV, inattaccabile da ruggine e corrosione. Idonea per il montaggio a palo, a sospensione o a parete. Fornita con **diffusore piatto** ed equipaggiata con **sistema modulare a LED GX53** con Kelvin impostabile, certificato TÜV-CB di lunga durata ed alta efficienza. Progettato in ottemperanza alle norme internazionali contro l'inquinamento luminoso (standard UNI 10819). Classe di isolamento II, grado di protezione IP55.*

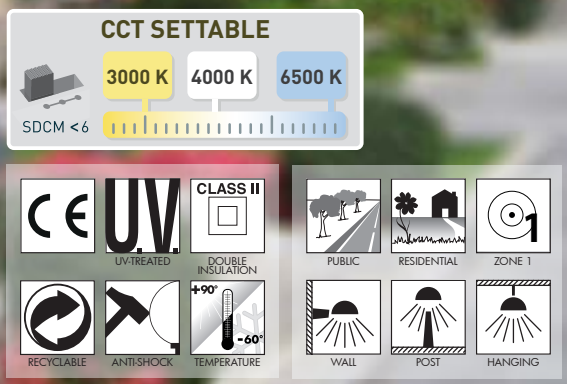

U35.132.D4K

MADE IN ITALY

SIMON GX53 LED - FLAT DIFFUSER

LARGE SIZE

SIMON GX53 LED - LANTERN COMPONENTS

IP55

Decorative **PINNACLE** to be mounted on the roof top for post installation or on the lantern base for hanging installation.

PINNACOLO *decorativo applicabile alla sommità del tetto (montaggio a palo) o sulla base della gabbia (montaggio a sospensione).*

LANTERN ROOF made of shockproof resin material, UV-rays stabilized. Tool-free opening for relamping and maintenance.

TETTO *realizzato in resina antiurto, stabilizzata ai raggi UV. Removibile senza l'ausilio di attrezzi per manutenzione e cambio lampadina.*

DIFFUSER with flat shape made of UV-rays stabilized polymethylmethacrylate (PMMA), provided with silicone rubber gasket to ensure an increased protection against external agent.

DIFFUSORE *in polimetilmetacrilato (PMMA) con configurazione piatta, provvisto di guarnizione in gomma siliconica per garantire una migliore protezione contro gli agenti esterni.*

CAGE made of shockproof resin material, UV-rays stabilized, rust and corrosion-free.

GABBIA *realizzata in resina antiurto, stabilizzata ai raggi UV, inattaccabile da ruggine e corrosione.*

SIMON GX53 LED

U35.000 *

Dimensions and weight
Height: 560 mm
Width: 330 mm
Depth: 330 mm
Weight: 4,6 Kg
Junction to support: diameter 60 mm
Area exposed to wind pressure:
CxS = m² 0,102

Moulded colours:
Black *White*

Painted colours:
Antique green *Antique bronze*

Diffuser PMMA:
Clear *Opal*

GX53 LED

- **COST SAVING:** long-life and efficient LED light sources.
- **BUILT-IN DRIVER:** quick and easy lamp replacement.
- **GREAT FLEXIBILITY:** GX53 standard lamp holder.
- **FUTURE-PROOFED LUMINARIES:** performances easy to upgrade to latest technology developments.
- **SUITABLE FOR OUTDOOR USE:** built-in driver fully protected against heat and humidity by silicone paste.

Lantern supplied with white resin CEILING provided with 4x TÜV-CB certified, long-life, efficient and **Kelvin settable GX53 LED lamps included**. Each lamp can be quickly and easily replaced individually, making the luminaries maintenance very simple.

100 - 240 V

LAMP	POWER	LUMINOUS FLUX (Φ TOTAL) UP TO	COLOUR TEMP.	*ADD. SUFFIX
GX53 LED	4x 10 W **40 W**	**5160 lm**	6500 K	.D4K
			4000 K	
			3000 K	

LED LAMPS

TÜV SÜD CE CB LVD EMC ERP

Comply with: EU2019/2015
EU2019/2020

Technical details on page 636.

CCT SETTABLE LED LAMP

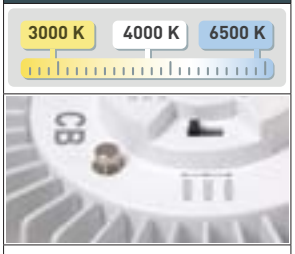

CCT switch settable in three different positions, to select the desired Kelvin temperature (3000K/4000K/6500K) and get a customized ambiance.

PHOTOMETRIC DATA SAMPLE

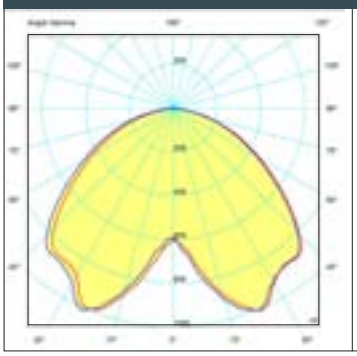

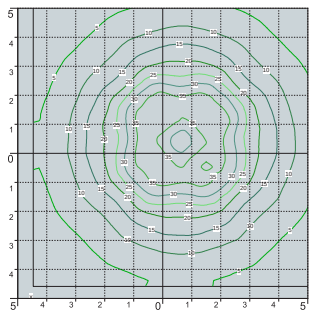

SIMON GX53 LED
4X10W

POST height 4mt
10x10mt area: average 22 lux

The photometric data for all the versions are available upon request or on our website.

NEBO/SIMON

LARGE SIZE

MADE IN ITALY

NEBO/SIMON

LARGE SIZE

NEBO OFIR/SIMON 2L

U33.201.R20

GX53 U35.201.R20

Pcs 1
Kg 31,9
mc 0,268

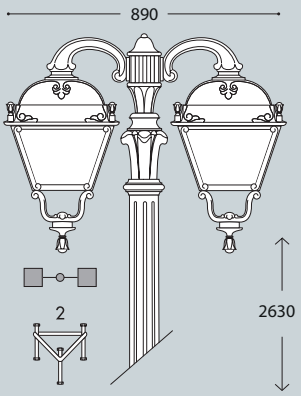

NEBO OFIR/SIMON 3L

U33.201.R30

GX53 U35.201.R30

Pcs 1
Kg 36,5
mc 0,342

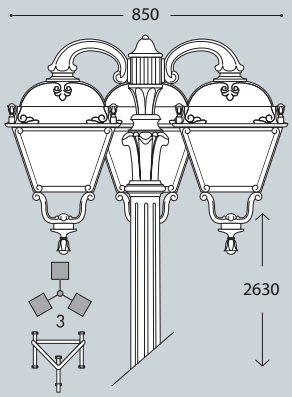

NEBO/SIMON

U33.201

GX53 U35.201

Pcs 1
Kg 25,6
mc 0,196

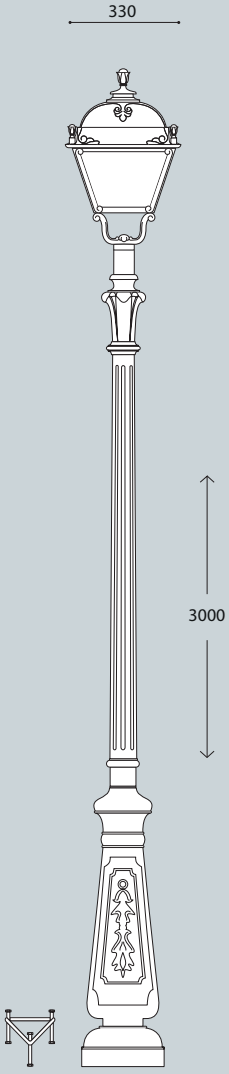

NEBO OFIR/SIMON 2L

U33.201.R20

GX53 U35.201.R20

Pcs 1
Kg 31,9
mc 0,268

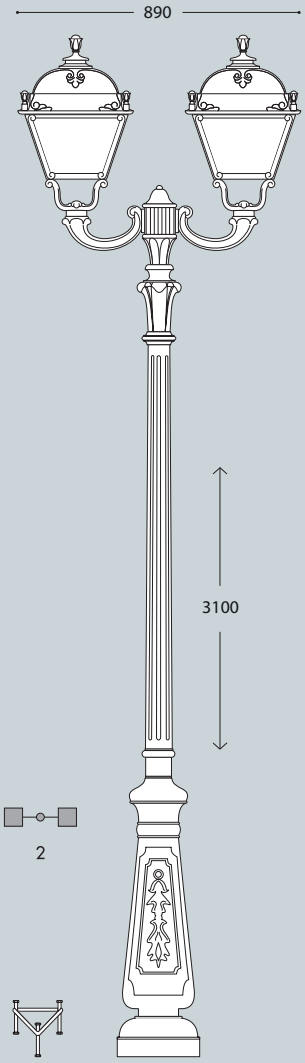

NEBO OFIR/SIMON 3L

U33.201.R30

GX53 U35.201.R30
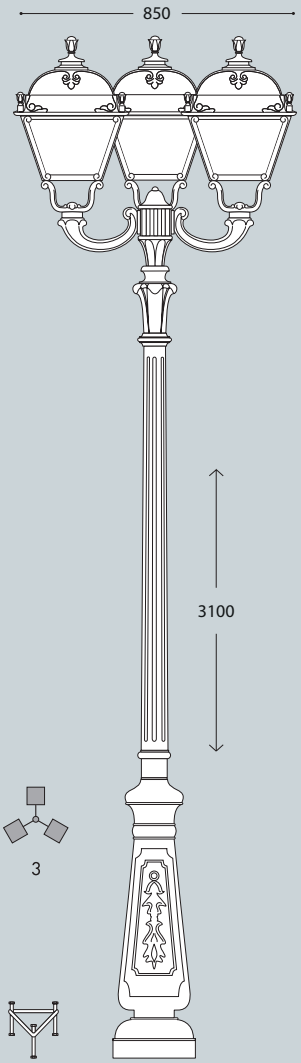
Pcs 1
Kg 36,5
mc 0,342