DATA SHEET
RCCB, RESIDUAL CURRENT CIRCUT BREAKER, SERIES AMPARO TYPE B



SCHRACK-INFO

- Tripping indicator
- Lift and clamp terminals on both sides
- Terminal cross-section: 2,5-35mm²
- Tterminal guide for secure connection
- snap-on mounting for DIN rail EN 50 022

Technical data:

Standard	IEC/EN 61008-1 & IEC / EN 62423
Poles:	4
Type	B
Delay-type	no delay
Rated current I_n	40A, 63A
Rated sensitivity $I_{\Delta n}$	0,03A
Rated voltage Ue	230/400V-AC
Insulation voltage U_i	500V
Rated frequency (AC):	50/60Hz
Rated impulse withstand voltage (1,2/50) U_{imp}	4kV
Dieelectric test voltage at ind. Freq. For 1 min.	2,5kV
Short-circuit current $I_{nc} = I_{\Delta c}$	10000A

Max. back-up fuse as short circuit protection (SCPD):			
	40A		63A gG
	63A		63A gG
Max. back-up fuse as overload protection (OCPD):			
	40A		25A gG
	63A		40A gG
Rated residual making and breaking capacity			
	40A		500A
	63A		630A
Tripping time			
	undelayed	IΔn	≤ 300ms
		2 x IΔn	≤ 150ms
		≥ 5 x IΔn	≤ 40ms
No tripping residual current $I_{\Delta no}$			≤ 0,5 IΔn
Lamp strength			commercially available,according to technical datas of electronic ballasts producer Max. 20 electronic ballasts per phase, max. 60 per
Certificate			VDE for Typ A in 2 pole version
Power loss	4 pole	40A	≤ 17W
		63A	≤ 22,5W
Polution degree			2
Electrical endurance:			> 2.000 operating cycles
Mechanical endurance:			> 2.000 operating cycles
Tripping indicator			Yes
Protection degree			IP 20
Ambient temperature daily average ≤ 35°C			-25 °C to +40 °C
Operating temperature:			-25°C to +70°C
Terminal connection type			Cable/U-type busbar / Pin-type busbar
Connection			From top and bottom
Terminal cross-section:			2,5-35mm²
Terminal tightening torque:			2.5 Nm
Mounting:			on DIN rail EN 60715 (35mm)
			by means of fast clip device

Wiring diagram:

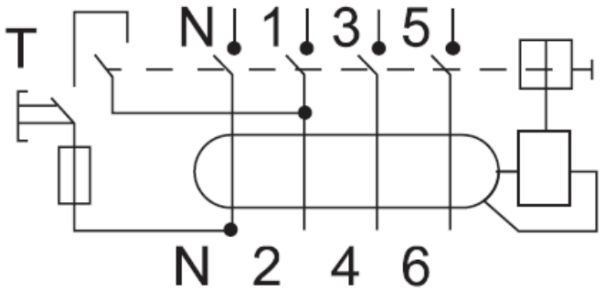

Dimensions:

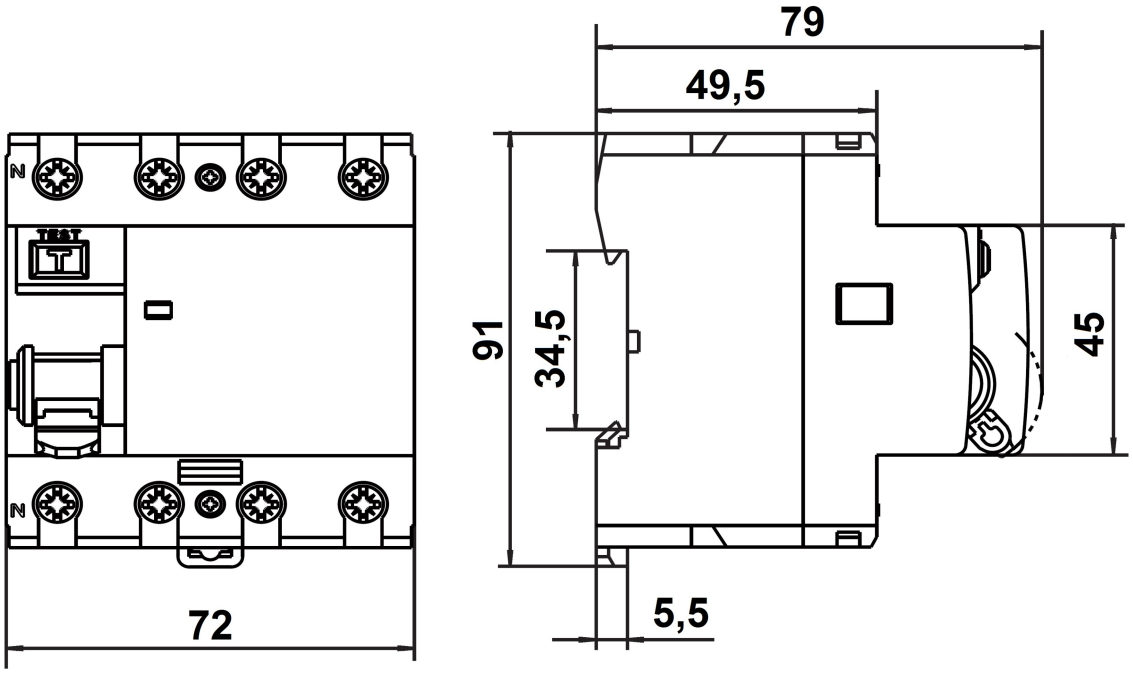

Articles:

RCCB AMPARO 10kA, 30mA, Type B

Description	order no.
4-pole	
40A / 4 / 0,03A	AR874103--
63A / 4 / 0,03A	AR876103--